TECHNICAL DATA

AUTOMATIC GAS-oil FRYER HOB

FGOIL80

Automatic machine for large-scale production or as professional equipment. Its quality makes it a very durable and resistant machine for industrial use.

TECHNICAL FEATURES:

- **Suitable for indoor and outdoor use.**
- AISI304 18/10 stainless steel body.
- AISI304 18/10 stainless steel tank integrated in the body.
- Wheels for easy movement.
- High power industrial burner controlled by a digital and temperature probe. Suitable for indoor and outdoor use.
- Maximum precision digital thermostat (~1°C).
- Insulation with high temperature thermal blanket SUPERWOLL, Density 128kg/m³ thickness 13mm. Except chimneys.
- AISI304 stainless steel smoke expulsion chimneys, for hanging dosing machine or potato cutter.
- Built according to CE regulations.
- Temperature from 80°C to 200°C.
- Oil drain valve 1".
- Fuel: butane / propane / city gas.

OPTIONAL:

- Special manufacture in terms of dimensions, tank depth, conical or cylindrical shape.
- Lid.
- Mast for hanging a dosing machine or potato cutter.
- Chimney insulation.

MODEL: FGOIL80
DIMENSIONS: LENGTH/FUND 800mm. / WIDTH 800mm. / HEIGHT 800 mm.
POWER RESISTANCES: 37 KW.
UPPER DIAMETER: Ø700mm.
LOWER DIAMETER: Ø500mm.
SARTEN HEIGHT: 170mm.
CAPACITY: 22 L.
VOLTAGE: 240V.

DIMENSIONS

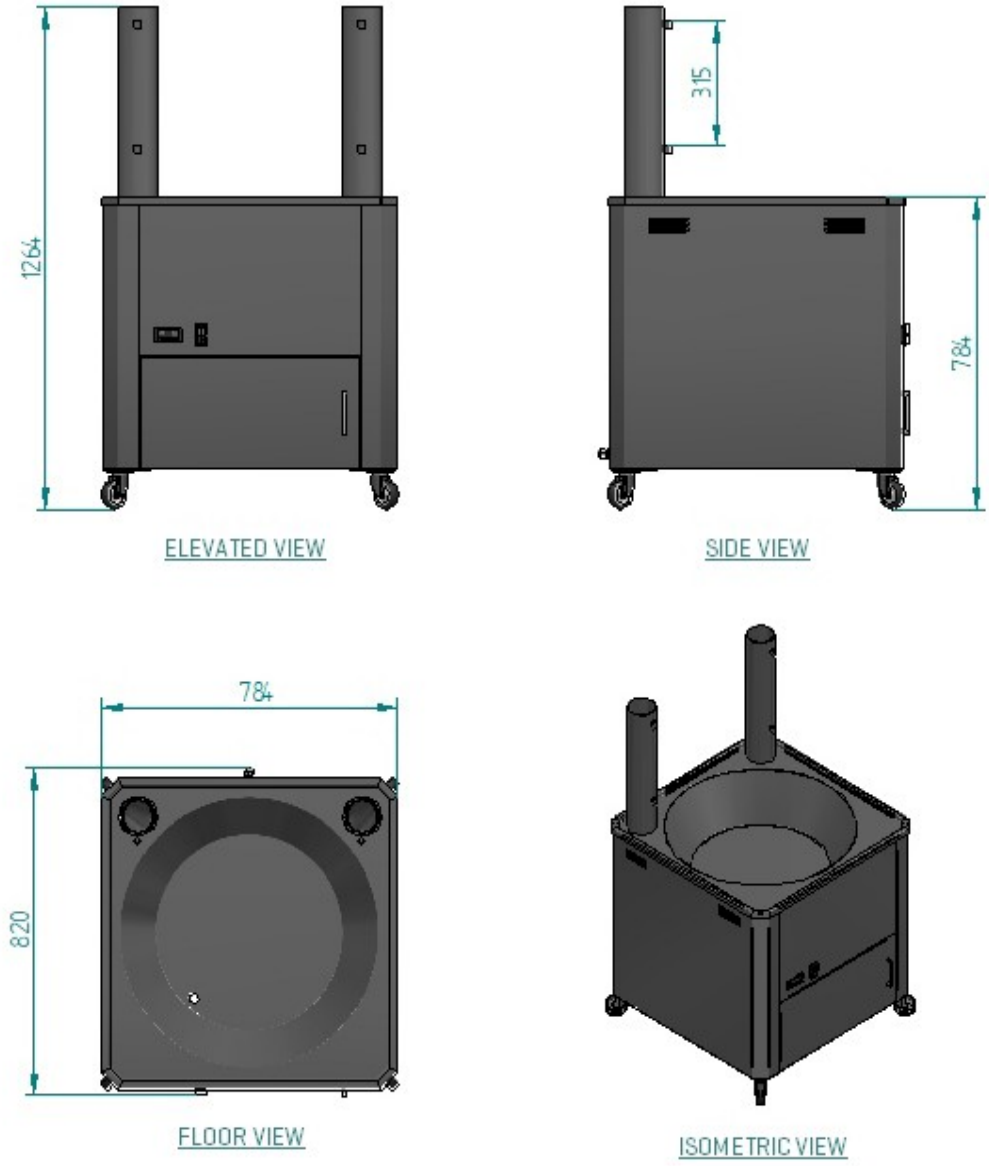

APPROXIMATE WEIGHT. 47,5 Kg.
ELECTRIC CONNECTION: 240v, 3N, 50/60

The Company reserves the right to make technical modifications without prior notice.

www.inhospan.com

TYPE OF GAS: Diesel.

V1.0 – 2021/06/21