TECHNICAL DATA

ECONOMICAL GAS FRYER

FGECO80

Robust and resistant stainless steel industrial machines ideal for low to medium production or as start-up equipment.

TECHNICAL CHARACTERISTICS:

- Suitable for outdoor use only.
- Manufactured of stainless steel.
- Fryng in stainless steel AISI 304 18/10 integrated in the body.
- Adjustable legs of PVC. · Insulation of high temperature thermal blanket Woll SUPER 13mm. thick 128kg/m3 density, except chimneys.
- Chimney flue exhaust in stainless steel AISI 30, extuder for hanging or cutting potatoes.
- Oil drain valve 1".
- Burner high presure.
- Combustible butane / propane.

Optional:

- Temperature measurement probe.
- Electric ignition button.
- Wheels for easy movement.
- Container lid.
- Insulated chimneys.

MODEL: FGECO80
DIMENSIONS: LENGTH 800 mm / WIDTH 800 mm / HEIGHT 800 mm.
POWER: 29 KW.
UPPER DIAMETER: Ø700mm.
INFERIOIR DIAMETER: Ø500mm.
SARTEN HEIGHT: 170mm.
CAPACITY: 22 L.
VOLTAGE: N/A

DIMENSIONS

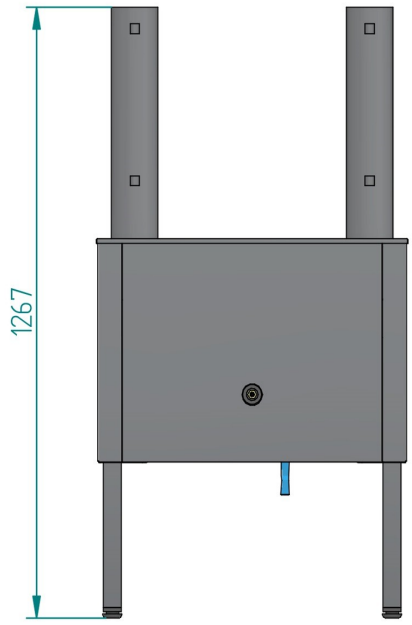

ELEVATED VIEW

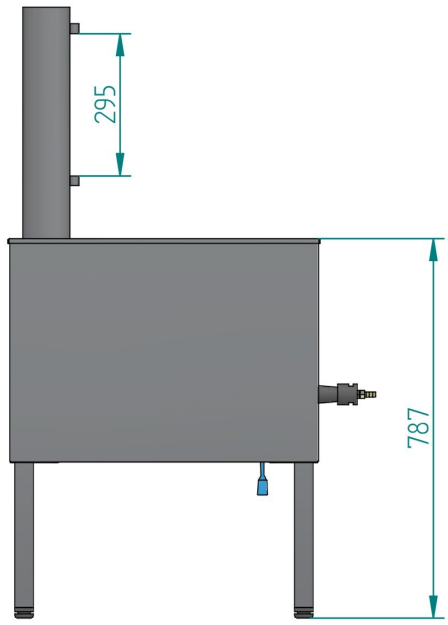

SIDE VIEW

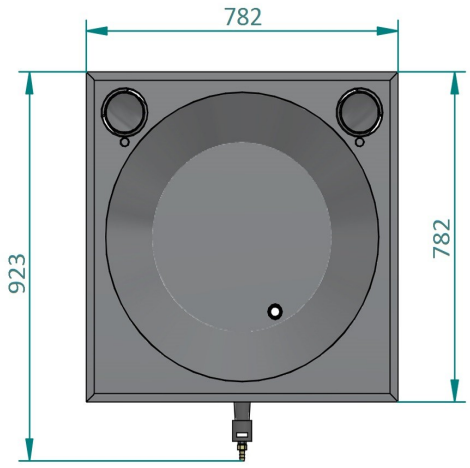

FLOOR VIEW

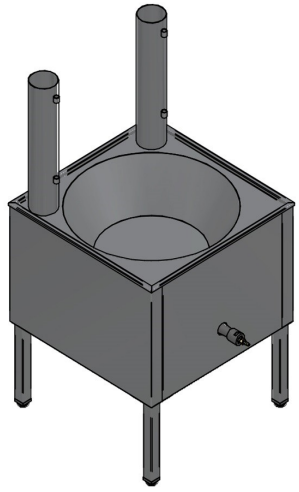

ISOMETRIC VIEW

APPROXIMATE WEIGHT. 42,5 Kg.
ELECTRICAL CONNECTION: N/A.

The Company reserves the right to make technical modifications without prior notice.

www.inhospan.com

TYPE OF GAS: Butane/Propane.

V1.0 – 2021/06/21